Bulletin G10M
August 2007

INSTALLATION ADJUSTMENT SERVICE
HIGH-LOW MANIFOLD SYSTEMS
TM-186-5015, 8015, 12520, 15020-PRV

IMPORTANT! Provide serial numbers for both valves when ordering parts!!
Small valve manufactured after July 2007 starting with serial # TM2039272

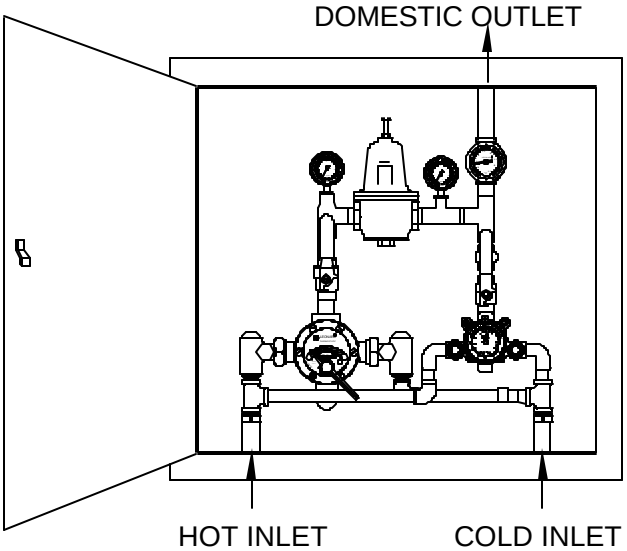

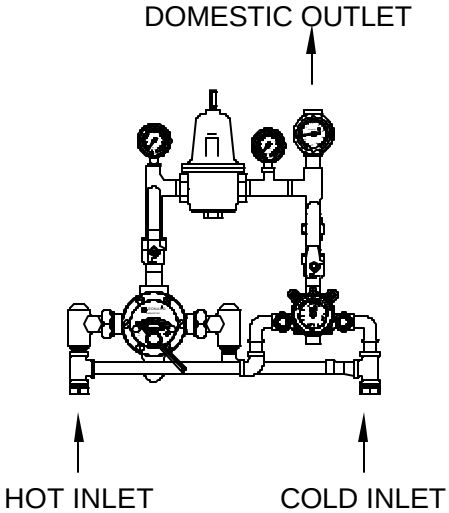

INSTALLATION

1. Type TM manifold systems are factory pre- assembled and tested and include large and small thermostatic water mixing valves which function as a system to meet both high and low demand for tempered water.
2. System should be installed at a location where it can easily be cleaned, adjusted or repaired.
3. System supplies must be connected as shown (Hot-left, Cold-right). Exercise caution when soldering.
4. Flush pipes thoroughly after system has been connected.
5. If this assembly is installed on a recirculated hot water system it **MUST** be piped according to **REQUIRED PIPING METHOD #2/PRV** (see page 3).
6. Refer to page 4 of this bulletin for correct Setup Instructions.
7. Please see page 8 troubleshooting pressure regulating valve **FOR OPERATING PRESSURES BELOW 30 PSI AND ABOVE 80 PSI**

CAUTION

All thermostatic water-mixing valves have limitations. They will not provide the desired accuracy outside of their flow capacity range. Consult the capacity chart on page 8. Minimum flow must be no less than as shown.

REMEMBER! THIS IS A CONTROL SYSTEM WHICH MUST BE CLEANED AND MAINTAINED ON A REGULAR BASIS (SEE MAINTENANCE GUIDE AND RECORD MGR-1000).

1360 Elmwood Avenue, Cranston, RI 02910 USA
Phone: 401.461.1200 Fax: 401.941.5310
Email: info@leonardvalve.com
Web Site: http://www.leonardvalve .com

ADJUSTMENT AND SERVICE

Leonard Type TM Thermostatic Water Mixing Valves are simple in design and may be easily cleaned, adjusted and repaired. If the installation is accessible, servicing may be completed without disconnecting the valves.

NOTE: High Low Manifold Systems include Thermostatic Water Mixing Valves which must be regularly maintained to provide best performance. Frequency of cleaning depends on quality of local water conditions and usage. See Maintenance Guide and Record MGR-1000.

WARNING

These mixing valves are equipped with an adjustable high temperature limit stop factory set at approximately 120°F (49°C) with an incoming hot water supply temperature of 150°F (65.5°C). If the hot water supply temperature of the job is greater than 150°F (65.5°C), the valves when turned to full HOT will deliver water in excess of 120°F (49°C) and the limit stops **MUST BE RESET BY THE INSTALLER!**

TO RESET ADJUSTABLE HIGH TEMPERATURE LIMIT STOP:

LARGE MIXING VALVE
(TM-50, 80,125 OR 150)

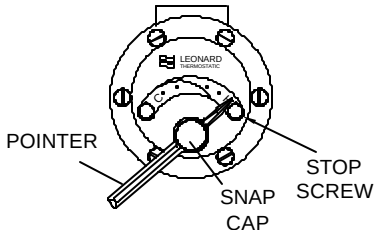

1. Remove SNAP CAP, SCREW & WASHER. Remove POINTER.
2. Temporarily place POINTER on the spline rod, turn RIGHT for warmer temperature, turn LEFT for cooler temperature. When valve is delivering warmest temperature desired, remove the pointer.
3. Replace POINTER on the spline rod so that its RIGHT edge is resting against the STOP SCREW located on the RIGHT SIDE OF THE COVER.
4. The new maximum temperature has now been set.Test this temperature by holding a thermometer under the flow of water to be certain it is as desired.

*** LIMIT STOP MUST BE RESET AND RECHECKED EACH TIME HANDLE IS REMOVED.**

SMALL MIXING VALVE
(TM-15 OR 20)

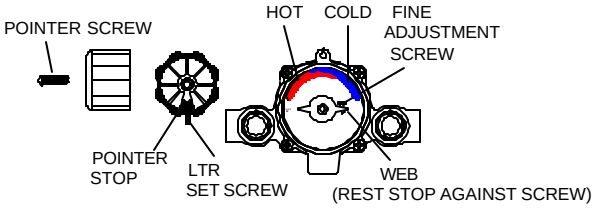

1. Loosen LTR SET SCREW, remove POINTER SCREW.
2. Adjust POINTER to maximum desired temperature.
3. Remove POINTER, replace POINTER on spline rod with STOP (which is cast into the underside on the pointer), resting against the BOTTOM side of the WEB on the FINE ADJUSTMENT SCREW.
4. If fine adjustment is needed, adjust FINE ADJUSTMENT SCREW on the cover, loosen for hotter or tighten for cooler temperature.
5. Replace POINTER and check temperature, if set to desired temperature replace POINTER SCREW, and tighten LTR SET SCREW.
6. The new maximum temperature has now been set. Test this temperature by holding a thermometer under the flow of water to be certain it is as desired.

*** LIMIT STOP MUST BE RESET AND RECHECKED EACH TIME HANDLE IS REMOVED.**

IMPORTANT! BOTH MIXING VALVES MUST BE SET AT THE SAME OPERATING TEMPERATURE.

SEE PAGES: 6 & 7 FOR COMPLETE PARTS BREAKDOWN

Check for significant variations in outlet flow. Thermostatic valves will NOT provide the desired accuracy outside of their flow capacity range. Minimum flows must be no less than shown (see Flow Capacities, page 8).

If installed on a recirculated hot water system, make certain the valve is piped according to Leonard Required Piping Method #2 PRV (see page 3).

REMEMBER! THIS IS A CONTROL DEVICE WHICH MUST BE CLEANED AND MAINTAINED ON A REGULAR BASIS. (SEE MAINTENANCE GUIDE AND RECORD, MGR-1000).

SETUP INSTRUCTIONS

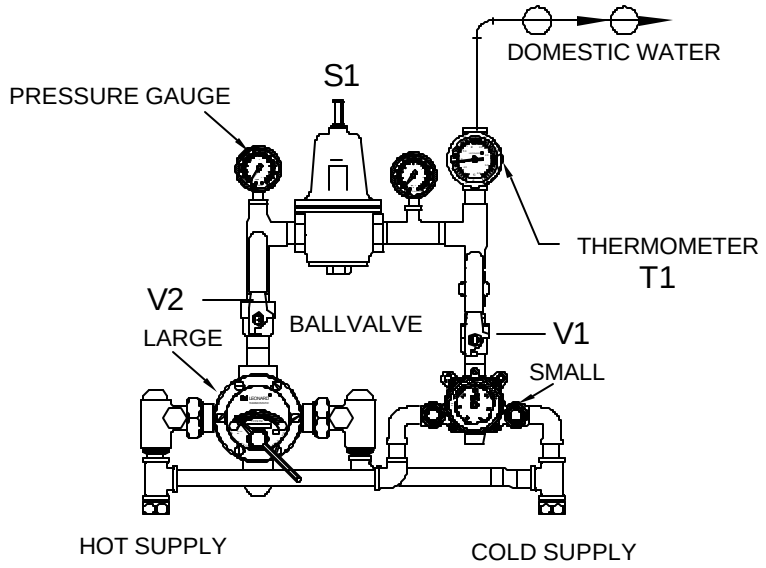

1. TM-186 High-Low Unit MUST be piped according to Method #2 PRV (see page 4). To balance recirculated domestic water systems, see page 4.

2. Make sure full hot and cold supplies to this assembly are operating. The temperature of the hot water source must be properly set and maintained.

3. The circulator (if used) must be turned OFF before setup.

4. Turn on enough fixtures for a flow of at least ____* downstream from this system. Make sure each fixture is set to deliver full "HOT" water.
   * 8 GPM (30 l/min.) if large TM valve is a TM-50
   *12 GPM (45 l/min.) if large TM valve is a TM-80
   *18 GPM (68 l/min.) if large TM valve is a TM-125
   *18 GPM (68 l/min.) if large TM valve is a TM-150

5. Close outlet Valve V1 at the smaller Type TM Valve and set the smaller TM valve to full "COLD".

6. Make sure Valve V2 at the large Type TM Valve is in the full open position.

7. Set outlet temperature of the large Type TM Valve to the required level.

8. Open outlet Valve V1 at the small TM Valve.

9. Turn off enough fixtures downstream from this unit to reduce flow to approximately 4 GPM (15 l/min.)

10. After reducing flow observe the temperature at Thermometer T1. Note: the temperature should drop 15 to 20°F (8 to 11°C) from step 7.

11. If the temperature dropped MORE THAN 20°F (11°C) turn nut S1 clockwise until it has dropped 15 to 20°F (8 to 11°C).

12. If the temperature has dropped LESS THAN 15°F (8°C), turn nut S1 counterclockwise until it has dropped 15 to 20°F (8 to 11°C).

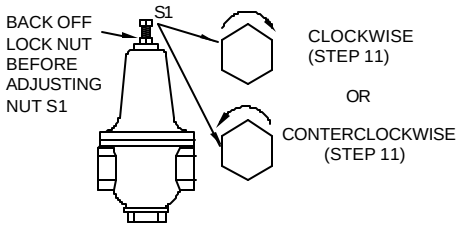

13. Shut outlet Valve V2 at the large TM valve.

14. Set outlet temperature of the small TM valve to the same temperature as the large TM Valve.

15. Open outlet Valve V2. System is operational.

* NOTE! FOR OPTIONAL OUTLET SETUP PIPING ARRANGEMENT, SEE PAGE 8

REQUIRED METHOD OF PIPING (RECIRCULATED DOMESTIC WATER SYSTEMS)

METHOD #2/PRV

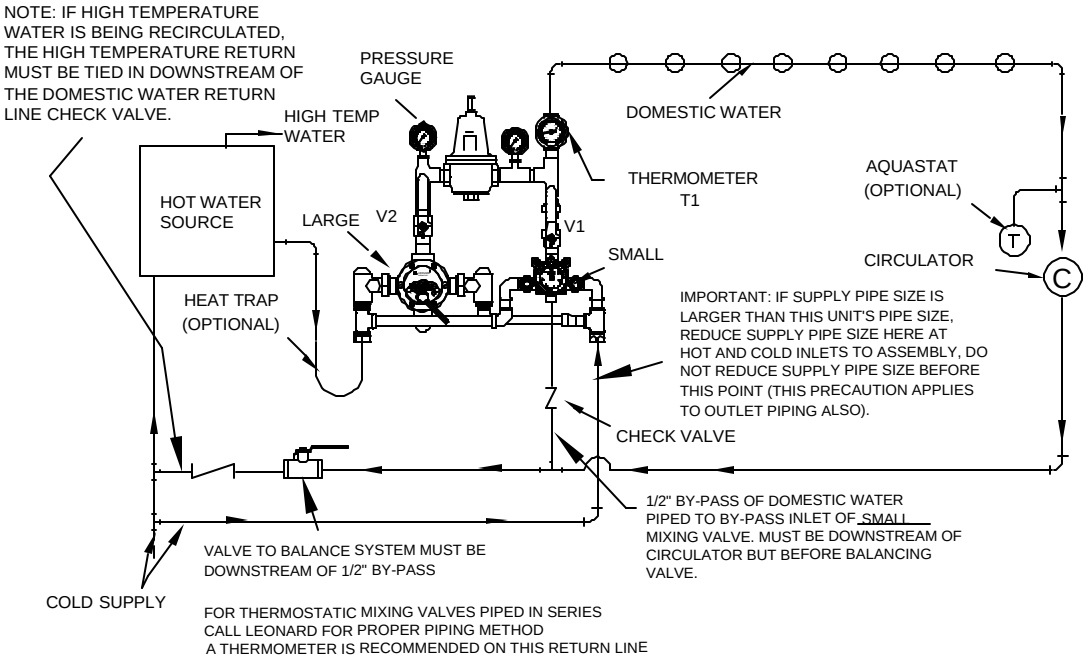

SEE BULLETIN TB-120 FOR ADDITIONAL PIPING METHODS DESIGNED FOR SPECIAL INSTALLATIONS.

THIS PIPING METHOD IS NOT TO BE USED FOR MORE THAN ONE BUILDING

PROCEDURE TO BALANCE RECIRCULATION SYSTEM

1. MAKE SURE NO WATER IS BEING DRAWN IN THE BUILDING. OPEN BALANCING VALVE APPROXIMATELY HALF WAY AND START CIRCULATOR.
2. OBSERVE TEMPERATURE UNTIL IT STABILIZES.
3. CLOSE BALANCING VALVE SLIGHTLY IF TEMPERATURE IS TOO HOT, OR OPEN IT SLIGHTLY IF TEMPERATURE IS TOO COLD AND ALLOW TEMPERATURE TO STABILIZE. REPEAT UNTIL DESIRED RECIRCULATED TEMPERATURE IS SET.

REMEMBER! THIS IS A CONTROL DEVICE WHICH MUST BE CLEANED AND MAINTAINED ON A REGULAR BASIS (SEE MAINTENANCE GUIDE AND RECORD, MGR-1000).

INSTRUCTIONS FOR SERVICING LARGER TM VALVE

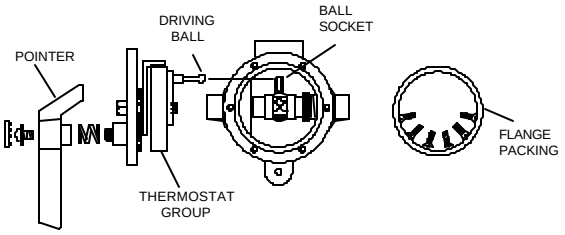

1. Remove snap cap, screw and washer, friction spring and pointer. Shut off hot and cold supplies to this valve.

2. Remove cover screws and cover, to which the thermostat group is attached.

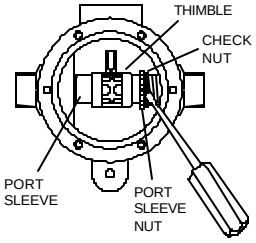

3. To clean port sleeve assembly (the thimble must slide freely on the port sleeve): unscrew the check nut as far as it will go, then screw the port sleeve nut into the base. The port sleeve and thimble may then be lifted out.

4. Clean with a non-corrosive cleaning solution. **DO NOT USE ABRASIVES!** The port sleeve should be reassembled in the valve with the shoulder to the left.

5. When reassembling, make sure driving ball of thermostat group engages the ball socket of the port sleeve assembly.

INSTRUCTIONS FOR SERVICING SMALLER TM VALVE

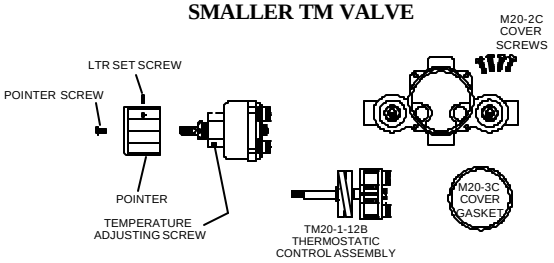

1. Remove pointer. Turn off hot and cold supplies at screwdriver checkstops. Remove M20-2C cover screws to release cover and thermostatic control assembly.

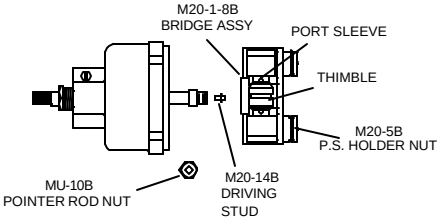

2. To remove bridge assembly, M20-1-8B, remove pointer rod nut (MU-10B) and pull bridge assembly off control rod. Do not misplace M20-14B driving stud.

3. To clean submerge bridge assembly in clean water or non-corrosive cleaning solution. **DO NOT USE ABRASIVES!** Be certain thimble moves freely on port sleeve. Note! Driving stud (M20-14B) must engage slot in thimble when reassembling.

4. To disassemble bridge assembly, see drawing next page (remove M20-5B holder nuts with screwdriver in slots provided).

TROUBLESHOOTING INSTRUCTIONS

Note: Provide valve serial number when ordering parts for either valve!

		Large Valve:	Small Valve:
PACKING & GASKETS	1. Leaks at stem. 2. Leak between valve cover and base.	Repair Kit # 1/50 for TM-50/80 Repair Kit # 1/125 for TM-125, TM-150	Repair Kit # 1/M20 (Packings & Gaskets)
PORT SLEEVE/BRIDGE ASSEMBLY	3. Valve delivers either all hot or all cold water, or will not mix consistently.	Repair Kit # R/50 for TM-50/80 Repair Kit # R/125 for TM-125/150	Repair Kit #R/M20 (Rebuilding Kit) or M20-1-8B Bridge Assembly
THERMOSTAT GROUP	4. After cleaning or replacing port sleeve/bridge assembly , valve performance is not consistent.	Repair Kit # R/50 for TM-50/80 Repair Kit # R/125 for TM-125/150	Repair Kit #R/M20 (Rebuilding Kit) or M20-G2 Thermostat Group
CHECKSTOPS	5. Hot water by-pass into cold line(or cold into hot). 6. Supplies cannot be shut off completely. Supplies leak at checkstop bonnets.	Repair Kit #2/50 for TM- 50/80 Repair Kit #2/125 for TM-125/150	Repair Kit #4/M20 (Checkstop Kit)

See pages 6 & 7 for Parts Breakdowns

LARGE TM VALVE PARTS

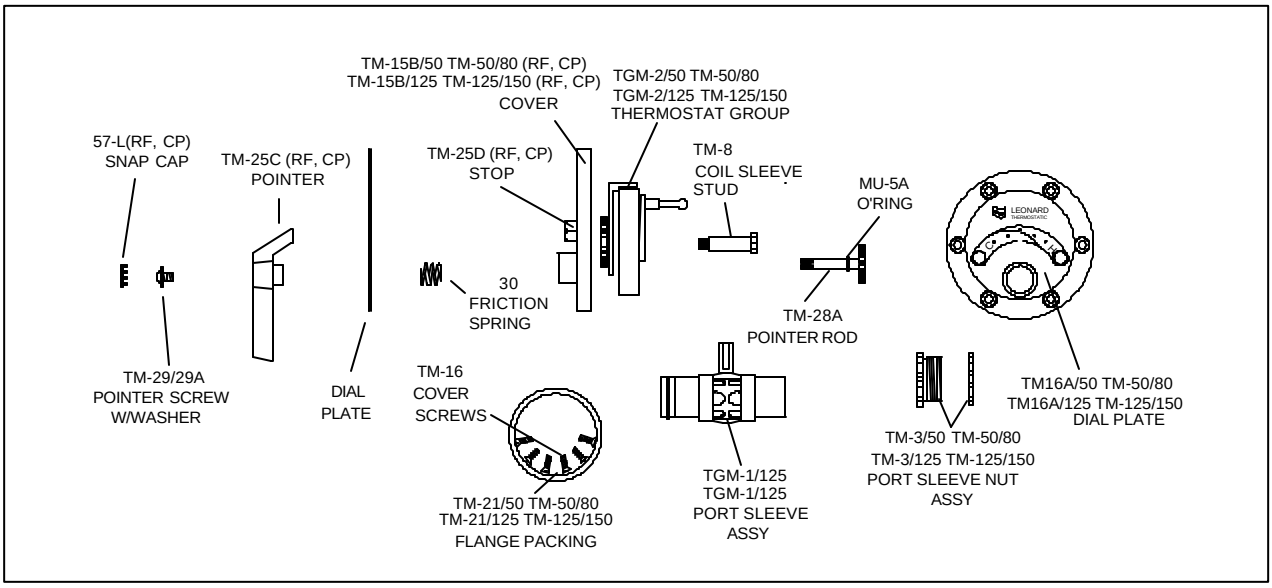

CHECKSTOP PARTS

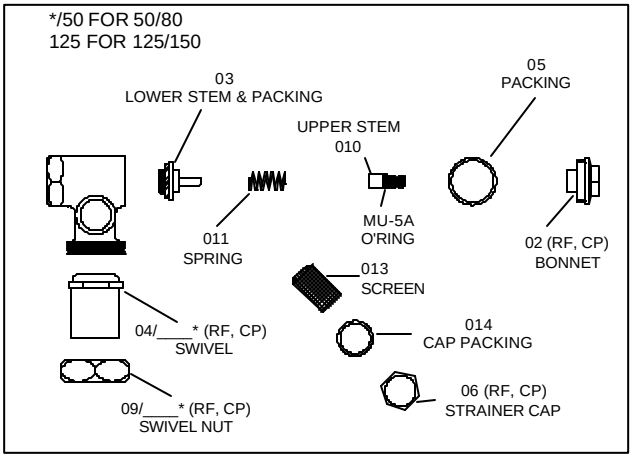

LOCK-TYPE POINTER (SUFFIX LTR)

Some TM valves are furnished with lockable Pointer SEE part noted.

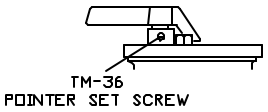

REPAIR KITS

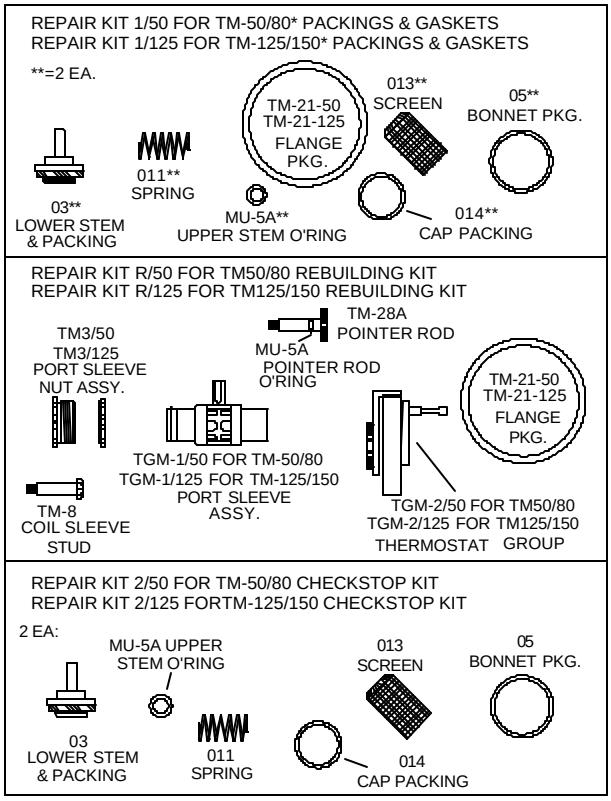

REMEMBER! THIS IS A CONTROL DEVICE WHICH MUST BE CLEANED AND MAINTAINED ON A REGULAR BASIS (SEE MAINTENANCE GUIDE AND RECORD, MGR-1000).

NOTE: AFTER INSTALLING NEW PARTS IT WILL BE NECESSARY TO RESET THE ADJUSTABLE LIMIT STOP ON EACH VALVE (SEE PAGE2).

TM 20 VALVE PARTS

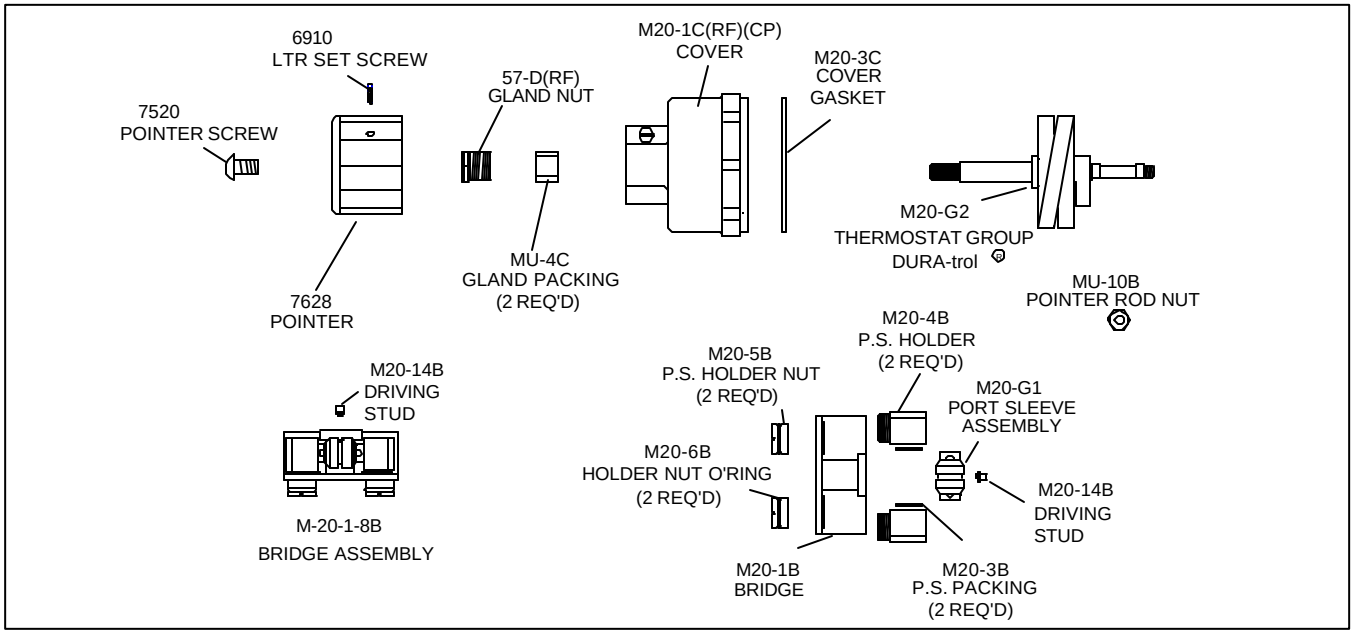

CHECKSTOP PARTS

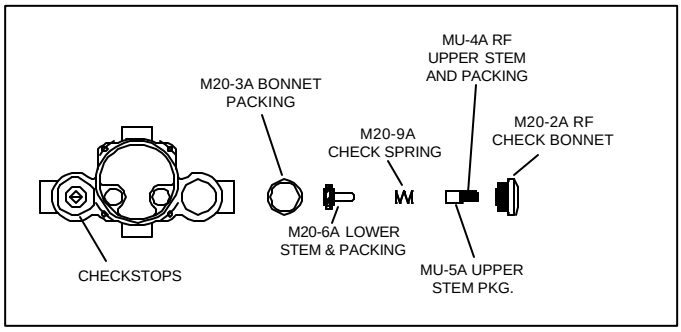

REPAIR KITS

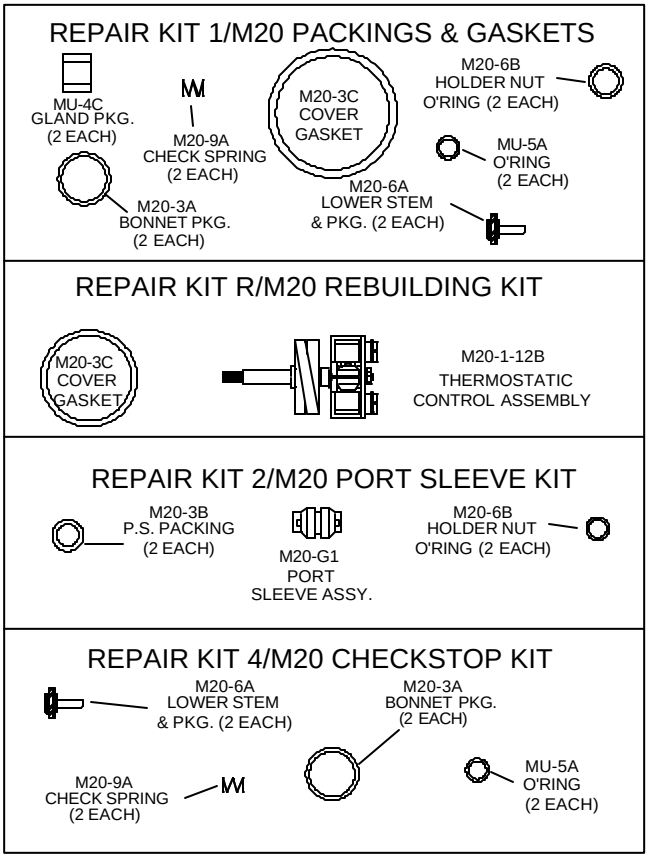

REMEMBER! THIS IS A CONTROL DEVICE WHICH MUST BE CLEANED AND MAINTAINED ON A REGULAR BASIS. SEE MAINTENANCE GUIDE AND RECORD.

NOTE: AFTER INSTALLING NEW PARTS IT WILL BE NECESSARY TO RESET THE ADJUSTABLE HIGH TEMPERATURE LIMIT STOP ON EACH VALVE (SEE PAGE 2).

OPTIONAL OUTLET SETUP PIPING
(BY OTHERS)

The addition of this piping arrangement (extra tee and ball valve) eliminates the need to turn showers on and off throughout the building at setup. The flows required in the setup instructions (page 3) are set by using Ball Valve A. (make sure main outlet ball valve is closed).

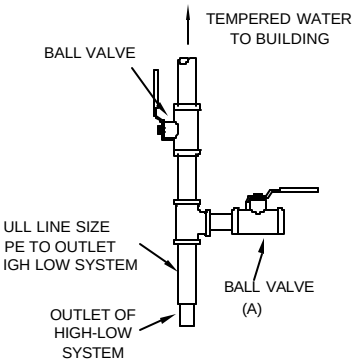

CAUTION! ALL THERMOSTATIC WATER MIXING VALVES AND SYSTEMS HAVE LIMITATIONS! THEY WILL NOT PROVIDE THE DESIRED PERFORMANCE OUTSIDE OF THEIR FLOW CAPACITY RANGE! CONSULT THE CAPACITY CHART BELOW AND OBSERVE MINIMUM FLOWS SHOWN.

FLOW CAPACITIES

MODEL	IN	OUT	MINIMUM FLOW (GPM) (l/min)	SYSTEM PRESSURE DROP (PSIG) 5	10	15	20	25	30	35	40	45	50	PSI
				,3	.7	.97	1.4	25	30	35	40	45	50	BAR
TM-186-5015PRV	3/4"	1"	1.0 (3.7)	19	29	38	45	51	56	62	68	72	75	GPM
				72	110	144	170	193	212	235	257	272	284	l/min
TM-186-8015PRV	1"	1 1/4"	1.0 (3.7)	22	34	42	50	56	62	68	75	80	84	GPM
				83	129	159	189	212	235	257	284	303	318	l/min
TM-186-12520PRV	1 1/4"	1 1/4"	1.0 (3.7)	48	65	80	95	112	120	130	140	158	165	GPM
				182	246	303	360	424	454	492	530	598	625	l/min
TM-186-15020PRV	1 1/4"	2"	1.0 (3.7)	53	72	88	103	117	133	147	150	170	185	GPM
				210	273	333	390	443	503	556	567	644	700	l/min

TROUBLESHOOTING PRESSURE REGULATING VALVE

When replacement parts are required for the pressure regulating valve, the following information must be given:

Manufacturer of PRV:_____

Type:_____

Serial number:_____

(This information is found on the tag attached

SYMPTOM:

PRV leaks by adjusting screw or if no pressure adjustment is possible.

LIMITED WARRANTY

Leonard Valve Company warrants the original purchaser that products manufactured by them (not by others) will be free from defects in materials and workmanship under normal conditions of use, when properly installed and maintained in accordance with Leonard Valve Company's instructions, for a period of one year from date of shipment. During this period the Leonard Valve Company will at its option repair or replace any product, or part thereof, which shall be returned, freight prepaid, to the Leonard factory and determined by Leonard to be defective in materials or workmanship. There are no warranties, express or implied, which extend beyond the description contained herein. There are no implied warranties of merchantability or of fitness for a particular purpose. In no event will Leonard be liable for labor or incidental or consequential damages. Any alteration or improper installation or use of the product will void this limited warranty.

© 2007 Leonard Valve Company
Printed in USA